SOT-883 General Purpose Transistor
PNP Silicon
Surface Mount Plastic Package

Absolute Maximum Ratings (T_A = 25°C unless otherwise noted)

Symbol	Parameter	Value	Units
V_{CBO}	Collector-Base Voltage	-40	V
V_{CEO}	Collector-Emitter Voltage	-40	V
V_{EBO}	Emitter-Base Voltage	-5	V
I_C	Collector Current	-200	mA
P_D	Power Dissipation (FR-4 Board – minimum pad)	200	mW
$R_{\theta JA}$	Thermal Resistance from Junction to Ambient	600	°C /W
T_J T_{STG}	Junction & Storage Temperature Range	-55 to +150	°C

These ratings are limiting values above which the serviceability of the device may be impaired.

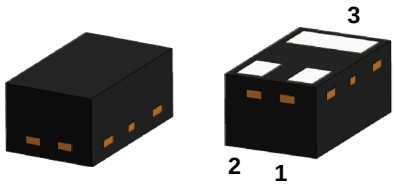

SOT-883 (DFN1006-3)

Specification Features:

- § DFN1006-3
- § Simplifies Circuit Design
- § RoHS Compliant
- § Green EMC
- § Matte Tin(Sn) Lead Finish
- § Weight: approx. 0.001g

Electrical Symbol:

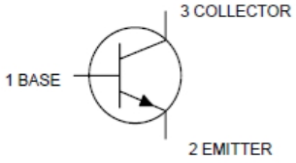

Device Marking Code:

Device Type	Marking	Shipping
MMBT3906N3		10,000/Reel

Electrical Characteristics (T_A = 25°C unless otherwise noted)

Off Characteristics

Symbol	Parameter	Test Condition	Limits		Unit
			Min	Max	
$V_{(BR)CEO}$	Collector-Emitter Breakdown Voltage (Note 1)	I_C =-1mA, I_B =0A	-40	-	Volts
$V_{(BR)CBO}$	Collector-Base Breakdown Voltage	I_C =-10uA, I_E =0A	-40	-	Volts
$V_{(BR)EBO}$	Emitter-Base Breakdown Voltage	I_E =-10uA, I_B =0A	-5	-	Volts
I_{CEX}	Collector Cutoff Current	V_{CE} =-30V, V_{EB} =-3V	-	-50	nA
I_{EBO}	Emitter Cutoff Current	V_{EB}=-5V, I_C=0A		-100	nA

Note 1: Pulse Test. Pulse width <300us, Duty cycle < 2.0%.

On Characteristics (Note 1)

Symbol	Parameter	Test Condition	Limits		Unit
			Min	Max	
H_{FE}	DC Current Dain	I_C =-0.1mA, V_{CE} =-1V	60	-	-
		I_C =-1.0mA, V_{CE} =-1V	80	-	
		I_C =-10mA, V_{CE} =-1V	100	300	
		I_C =-50mA, V_{CE} =-1V	60	-	
		I_C =-100mA, V_{CE} =-1V	30	-	
$V_{CE(sat)}$	Collector-Emitter Saturation Voltage	I_C=-10mA, I_B=-1mA	-	-0.25	Volts
		I_C=-50mA, I_B=-5mA	-	-0.4	
$V_{BE(sat)}$	Base-Emitter Saturation Voltage	I_C=-10mA, I_B=-1mA	-0.65	-0.85	Volts
		I_C=-50mA, I_B=-5mA	-	-0.95	

Small-signal Characteristics

Symbol	Parameter	Test Condition	Limits		Unit
			Min	Max	
f_T	Current-Gain-Bandwidth Product	I_C =-10mA, V_{CE} =-20V, f = 100MHz	250	-	MHz
C_{obo}	Output Capacitance	V_{CB} =-5V, I_E =0A, f = 1.0MHz	-	4.5	pF
C_{ibo}	Input Capacitance	V_{BE} =-0.5V, I_C =0A, f = 1.0MHz	-	10	pF
h_{ie}	Input Impedancen	V_{CE} =-10V, I_C =-1mA, f = 1.0kHz	2	12	pF
h_{re}	Voltage Feedback Ratio	V_{CE} =-10V, I_C =-1mA, f = 1.0kHz	0.1	10	$X10^{-4}$
h_{fe}	Small-signal Current Gain	V_{CE} =-10V, I_C =-1mA, f = 1.0kHz	100	400	-
h_{oe}	Output Admittance	V_{CE} =-10V, I_C =-1mA, f = 1.0kHz	3	60	θ mhos
NF	Noise Figure	V_{CE} =-5V, I_C =-100uA Rs=1.0kΩ f = 1.0kHz		4	dB

Switching Characteristics

Symbol	Parameter	Test Condition	Limits		Unit
			Min	Max	
t_d	Delay Time	V_{CC} =-3V, V_{BE} =-0.5V,	-	35	nS
t_r	Rise Time	I_C =-10mA, I_{B1} =-1mA	-	35	
t_s	Storage Time	V_{CC} =-3V, I_C =-10mA,	-	225	nS
t_f	Fall Time	I_{B1} = I_{B2} =-1mA	-	75	

SOT-883 Package Outline

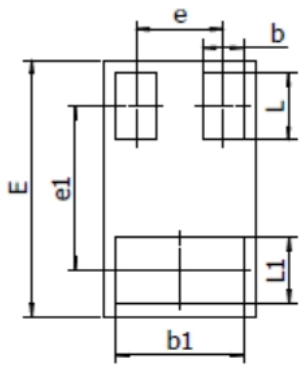

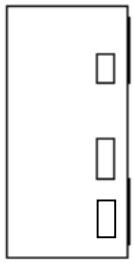

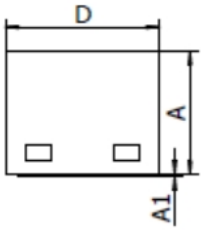

Typical Soldering Pattern(mm):

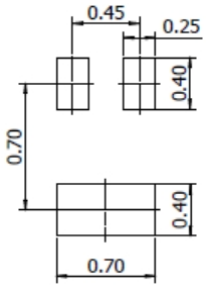

DIM	MILLIMETERS		INCHES	
	MIN	MAX	MIN	MAX
A	0.46	0.50	0.018	0.020
A1	---	0.03	---	0.001
D	0.55	0.65	0.022	0.026
E	0.95	1.05	0.037	0.041
b	0.12	0.22	0.005	0.008
b1	0.45	0.55	0.018	0.022
L	0.22	0.32	0.008	0.013
L1	0.22	0.32	0.008	0.013
e	Typ. 0.34		Typ. 0.013	
e1	Typ. 0.65		Typ. 0.026	