150mW SOT-523 SURFACE MOUNT
Plastic Package
N-Channel MOSFET

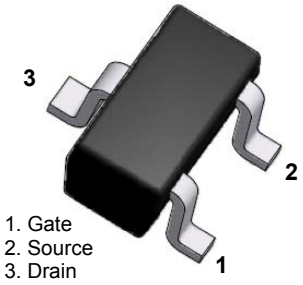

SOT-523

Absolute Maximum Ratings T_A = 25°C unless otherwise noted

Symbol	Parameter	Value	Units
V_{DS}	Drain-Source Voltage	30	V
V_{GS}	Continuous Gate-Source Voltage	±20V	V
I_D	Continuous Drain Current	100	mA
P_D	Power Dissipation	150	mW
$R_{\theta JA}$	Thermal Resistance from Junction to Ambient	833	°C /W
T_{STG}	Storage Temperature Range	-55 to +150	°C
T_J	Operating Junction Temperature	+150	°C

These ratings are limiting values above which the serviceability of the device may be impaired.

Specification Features:

- Low On-resistance
- Fast Switching Speed
- Low Voltage Drive Makes This Device Ideal for Portable Equipment
- Easily Designed Drive Circuits
- Easy to Parallel
- RoHS Compliant & Green EMC
- Matte Tin(Sn) Lead Finish
- Weight: approx. 0.002g

Electrical Symbol:

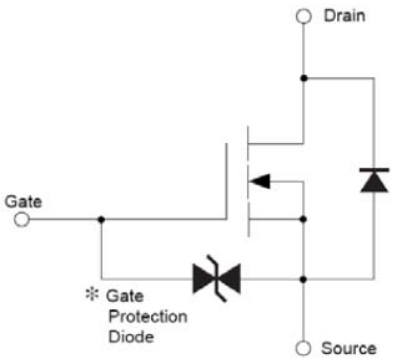

Device Marking Code:

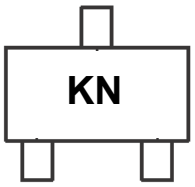

Off Characteristics

Symbol	Parameter	Test Condition	Limits			Unit
			Min	Typ	Max	
BV_{DSS}	Drain-Source Breakdown Voltage	V_{GS}=0V, I_D=10uA	30			Volts
I_{GSS}	Gate-Body Leakage	V_{DS}=0V, V_{GS}=±20V			±1	uA
I_{DSS}	Zero Gate Voltage Drain Current	V_{DS}=30V, V_{GS}=0V			1	μA

On Characteristics

Symbol	Parameter	Test Condition	Limits			Unit
			Min	Typ	Max	
$V_{th(GS)}$	Gate-Threshold Voltage	V_{DS}= 3V, I_D=100uA	0.8		1.5	Volts
$R_{DS(on)}$	Drain-Source On-Resistance	V_{GS}=4V, I_D=10mA			8	Ω
		V_{GS}=2.5V, I_D=1mA			13	Ω
g_{fs}	Forward Trans Conductance	V_{DS}=3V, I_D=10mA	20			ms
V_{SD}	Drain-Source Diode Forward Voltage	I_S=115mA, V_{GS}=0V			1.2	V

Dynamic Characteristics

Symbol	Parameter	Test Condition	Limits			Unit
			Min	Typ	Max	
Ciss	Input Capacitance	V_{DS} = 5V V_{GS} = 0V f = 1.0MHz		13		pF
Coss	Output Capacitance			9		pF
Crss	Reverse Transfer Capacitance			4		pF

Switching Characteristics

Symbol	Parameter	Test Condition	Limits			Unit
			Min	Typ	Max	
$t_{D(on)}$	Turn-on Time	V_{DD}=5V, R_L=500Ω, I_D=10mA, V_{Gs}=5V, R_G = 10Ω		15		nS
$t_{D(off)}$	Turn-off Time			80		nS

SOT-523 Package Outline

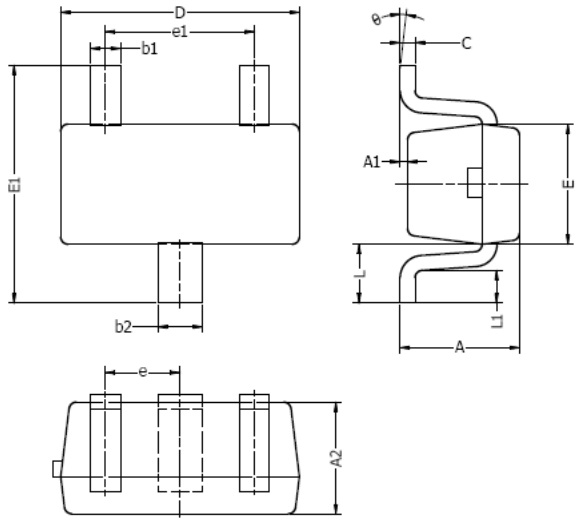

DIM	MILLIMETERS		INCHES	
	MIN	MAX	MIN	MAX
A	0.70	0.90	0.028	0.035
A1	0.00	0.10	0.000	0.004
A2	0.70	0.80	0.028	0.031
b1	0.15	0.25	0.006	0.010
b2	0.25	0.35	0.010	0.014
c	0.10	0.20	0.004	0.008
D	1.50	1.70	0.059	0.067
E	0.70	0.90	0.028	0.035
E1	1.45	1.75	0.057	0.069
e	0.50 TYP.		0.020 TYP.	
e1	0.90	1.10	0.035	0.043
L	0.40 REF.		0.016 REF.	
L1	0.10	0.30	0.004	0.012
θ	0^0	8^0	0^0	8^0

NOTES:
1. Above package outline conforms to JEITA EAIJ ED-7500A SC-75A.
2. Dimensions are exclusive of Burrs, Mold Flash & Tie Bar extrusions.

Typical Soldering Pattern:

